

LRH Unique Supplies

ALUMINUM VENTILATED FACADE SYSTEMS

2026

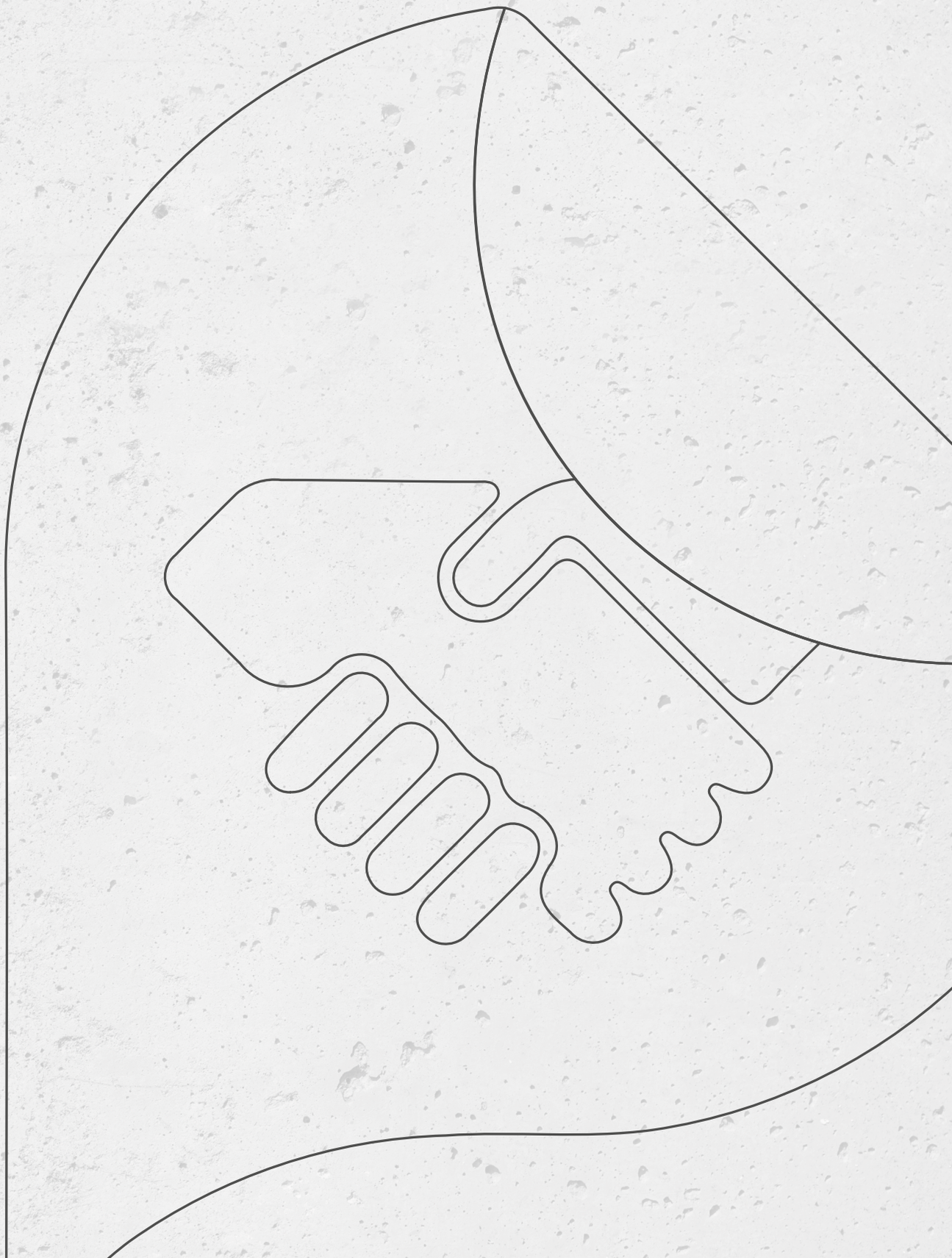

This concept proposes an innovative solution for cladding exterior walls with various materials, primarily aimed at separating the cladding material from the supporting wall.

By implementing this concept, a ventilated façade is achieved through the installation of a rigid covering, which is separated from the building's wall and anchored to it to take on its own loads, in addition to the loads generated by the wind.

The cavity created between the cladding and the wall must be open at certain points, generally at the joints, to ensure adequate ventilation. This cavity helps improve the building's performance by preventing moisture and condensation accumulation, and it provides greater stability to the entire structure, contributing to extending its lifespan.

In principle, the installation involves mounting an aluminum frame on the wall and the building's structure, followed by securing the cladding panels.

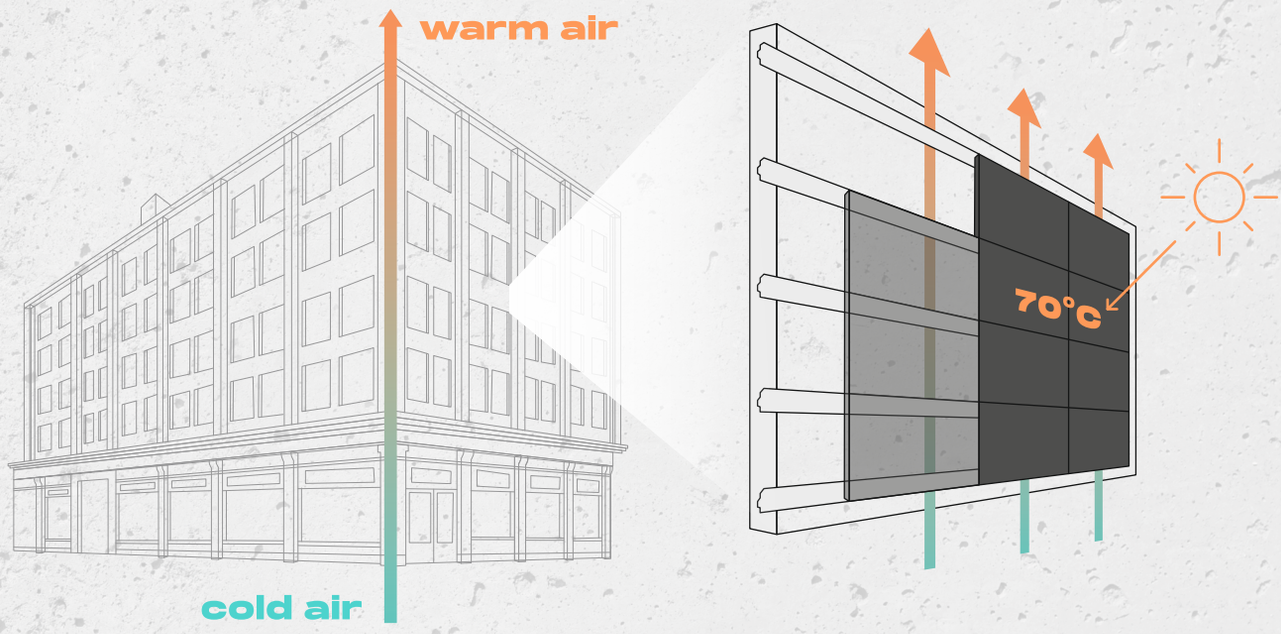

ADVANTAGES

✔
The ventilated facade offers numerous advantages in protecting the enclosing wall and the building's structure against atmospheric agents, thus contributing to improved functionality and enhanced durability.

✔
Firstly, this efficient solution reduces thermal expansion and prevents the appearance of moisture stains. By separating the cladding material from the brick wall, the ventilated façade provides a protective barrier against the elements and helps maintain the aesthetic appearance of the building over the long term.

✔
The facade is a crucial element in protecting the building against atmospheric agents, and due to its superior ceramic performance, a significant improvement in this protection is achieved. The ceramic material used in the facade cladding is recognized for its weather resistance and insulating properties.

✔
Ventilated facades offer architects elements with an attractive design that can be used in a variety of projects and open new horizons of creativity.

✔
·Another advantage of the ventilated facade is the generation of additional interior space. By installing thermal insulation on the exterior side of the brick wall, the thermal inertia of the supporting wall is optimized, leading to significant energy savings and improved thermal comfort inside the building.

✔
An essential aspect of this solution is the elimination of thermal bridges. The ventilated facade creates a ventilated cavity between the ceramic panels and the cladding, allowing for the installation of continuous thermal insulation. This ensures the protection of concrete panels, shutter boxes, and other important structural elements, reducing the risk of condensation and damage caused by moisture.

✔
The weight of the facade is supported by the concrete structure, while the cladding fulfills its role of withstanding wind loads through the aluminum framework. In this way, a balanced distribution of functions is achieved, promoting the durability and stability of the building.

In conclusion, the ventilated facade represents an innovative and energy-efficient solution that brings numerous benefits in protecting and improving the building's performance.

THERMAL ADVANTAGES

During the winter it keeps the building warm and cold air is prevented from affecting the building's structure.

During the summer the ventilated facade has a cooling effect when the outside temperatures are high.

Most of the sun's rays are reflected by the cladding.

The heat that passes through the panel is partially dissipated by the ventilation effect in the cavity.

An additional benefit in temperature control is the minimization of structural movement of the building.

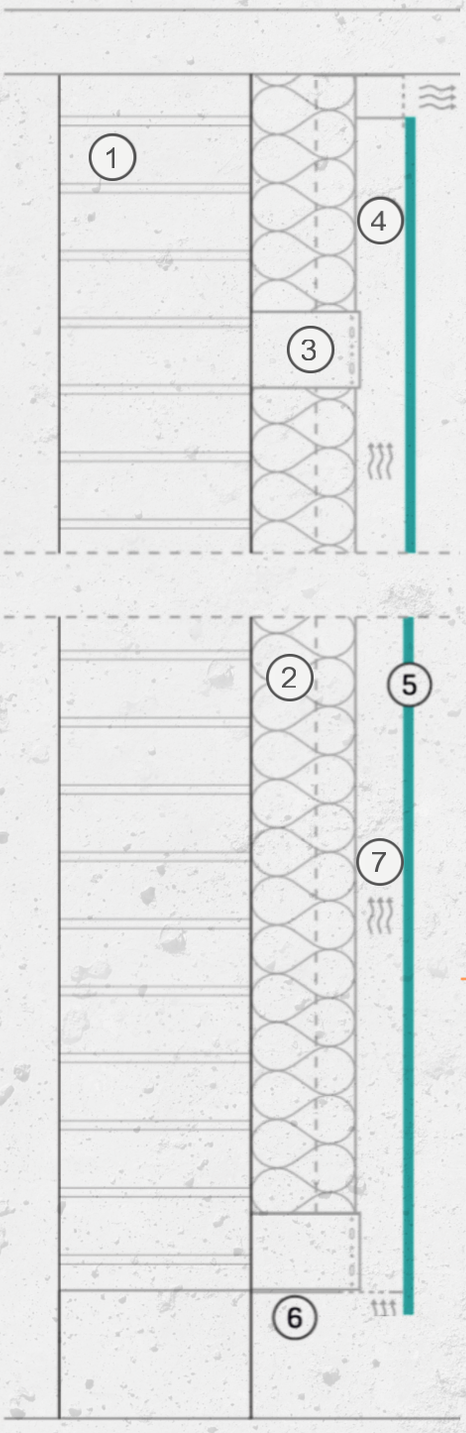

1 support wall

2 thermal insulation

3 brackets placed on thermal insulating pads

4 aluminum fastening profiles

5 fiber-cement boards

6 fasteners

7 air chamber

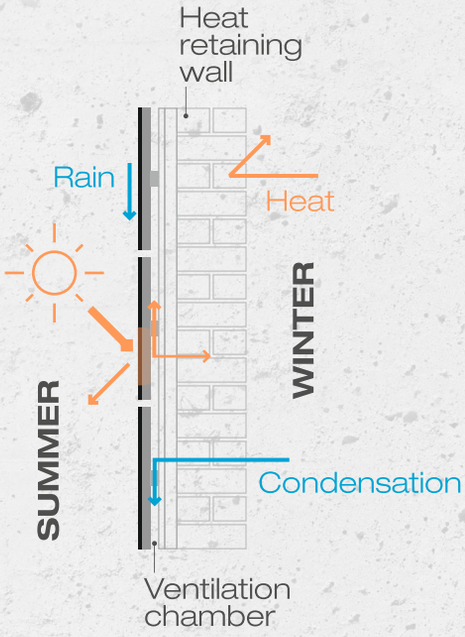

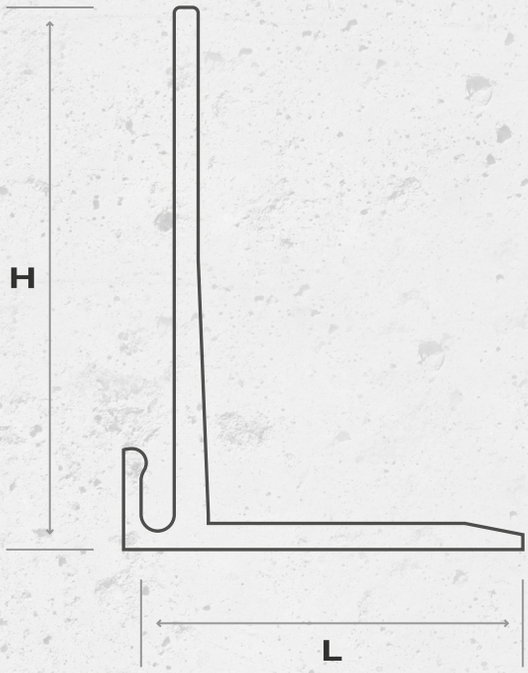



CLAMP

profile code	L	H	material observations
LRHus-01.04.02	40,00	40,00	EN AW - 6063 [AlMg0.7Si] T66
LRHus - 01.04.03	40,00	60,00	EN AW - 6063 [AlMg0.7Si] T66

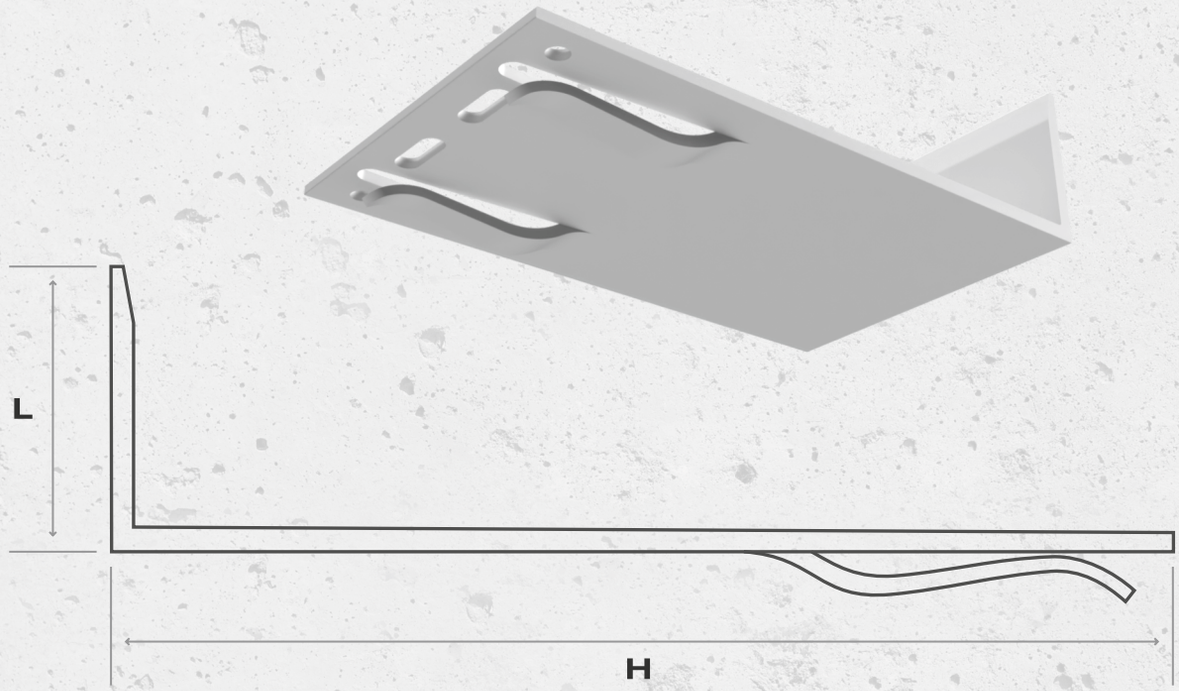

BRACKET

profile code	L	H	material observations
LRHus-01.01.03 - Bracket L40x120x90	40,00	120,00	EN AW - 6063 [AlMg0.7Si] T66
LRHus-01.01.02 - Bracket L40x150x90	40,00	150,00	EN AW - 6063 [AlMg0.7Si] T66
LRHus-01.01.11 - Bracket L60x150x90	60,00	150,00	EN AW - 6063 [AlMg0.7Si] T66
LRHus-01.01.04 - Bracket L60x180x90	60,00	180,00	EN AW - 6063 [AlMg0.7Si] T66
LRHus-01.01.05 - Bracket L60x210x90	60,00	210,00	EN AW - 6063 [AlMg0.7Si] T66



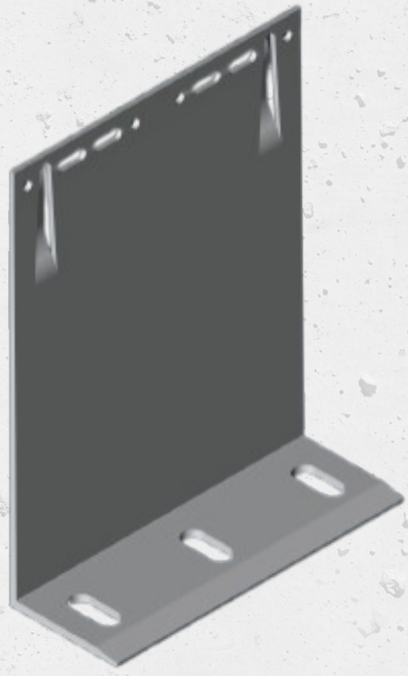

DOUBLE BRACKET

cod profil	L	H	observații material
LRHus - 01.01.07 Double Bracket L40x120x160	40,00	120,00	EN AW - 6063 [AlMg0.7Si] T66
LRHus - 01.01.06 Double Bracket L40x150x160	40,00	150,00	EN AW - 6063 [AlMg0.7Si] T66
LRHus - 01.01.08 Double Bracket L60x180x160	60,00	180,00	EN AW - 6063 [AlMg0.7Si] T66
LRHus - 01.01.09 Double Bracket L60x210x160	60,00	210,00	EN AW - 6063 [AlMg0.7Si] T66

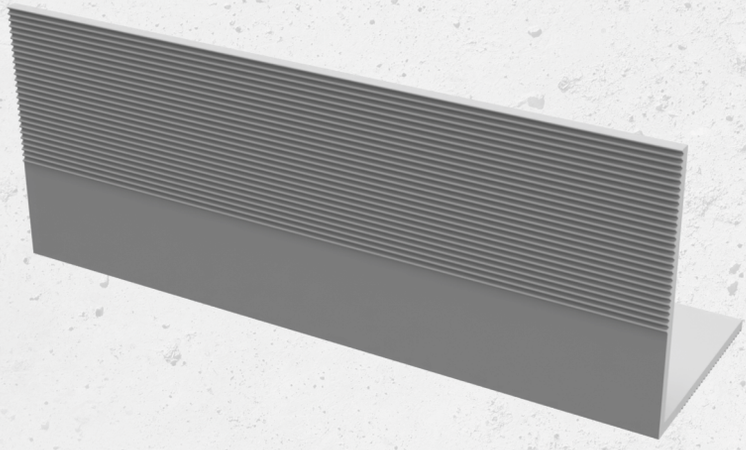

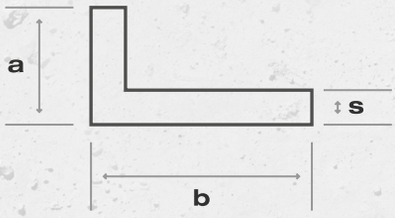

‘L’ PROFILE

profile code	a	b	s	material observations	Kg/ ml
C01	20,00	40,00	2,0	EN AW – 6063 [AlMg0.7Si] T66	0,313
C02	20,00	60,00	2,0	EN AW – 6063 [AlMg0.7Si] T66	0,421
C03	40,00	50,00	2,0	EN AW – 6063 [AlMg0.7Si] T66	0,474
C04	60,00	60,00	2,0	EN AW – 6063 [AlMg0.7Si] T66	0,637

For different sizes of the featured parts, please contact us.



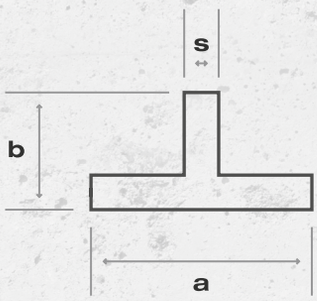

‘T’ PROFILE

profile code	a	b	s	material observations	Kg/ ml
T01	80,00	45,00	2,0	EN AW – 6063 [AlMg0.7Si] T66	0,661
T02	100,00	50,00	2,0	EN AW – 6063 [AlMg0.7Si] T66	0,799
T03	110,00	50,00	2,0	EN AW – 6063 [AlMg0.7Si] T66	0,851
T04	120,00	60,00	2,0	EN AW – 6063 [AlMg0.7Si] T66	1,015

For different sizes of the featured parts, please contact us.

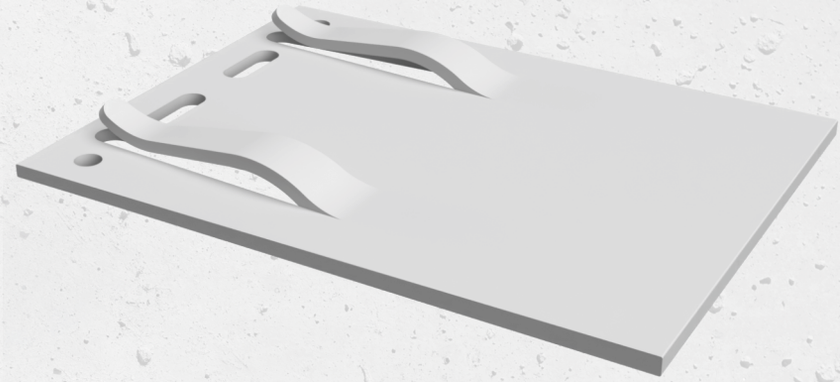

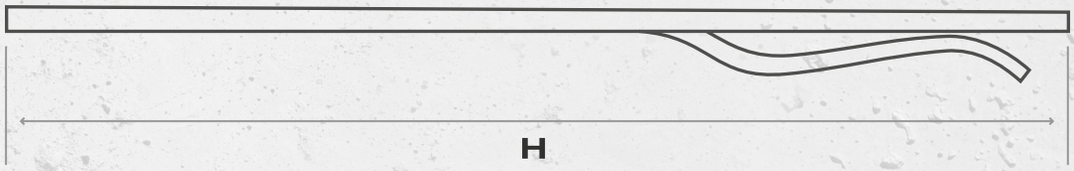

PROFILE EXTENSION

profile code	H	material observations
LRHus - 01.05 - 120x90	120,00	EN AW - 6063 [AlMg0.7Si] T66
LRHus - 01.06 - 120x160	120,00	EN AW - 6063 [AlMg0.7Si] T66

As custom system developers for ventilated facades, we encourage you to get in touch with us to discuss any new elements you wish to integrate. We will assess the possibility of extrusion and identify the optimal technological solution for your needs.

The polyamide bushes come in two types, used for fixed holes and mobile holes that allow the fibercement to work with temperature and humidity differences for the following:

1. **Thermal and electrical insulation**
2. **Chemical resistance**
3. **Mechanical strength and durability**
4. **Corrosion prevention**

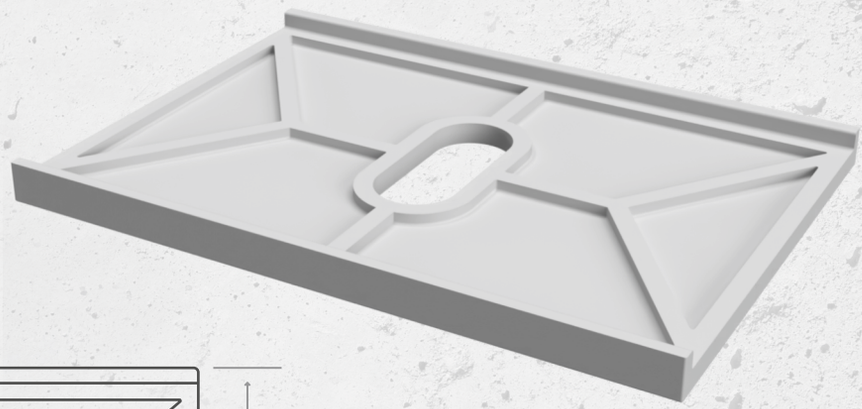

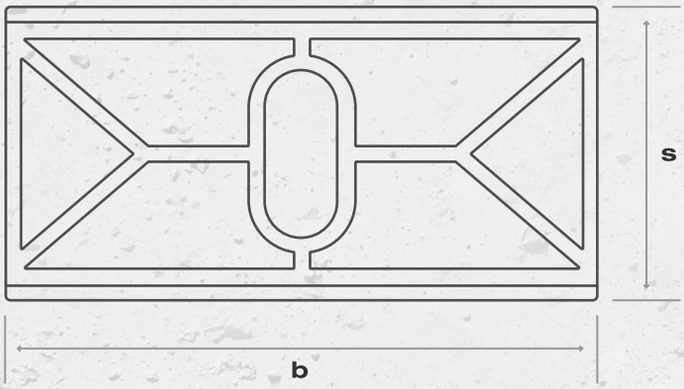

THERMAL BARRIER

profile code		b	s	material observations
Tc01	LRHus - 01.01.01	46	55	Poliamidă 6
Tc02	LRHus - 01.01.01	40	90	Poliamidă 6
Tc03	LRHus - 01.01.01	60	90	Poliamidă 6
Tc04	LRHus - 01.01.01	40	160	Poliamidă 6
Tc05	LRHus - 01.01.01	60	160	Poliamidă 6

We offer a comprehensive range of assembly components dedicated to ventilated facades, manufactured under the RAWLPLUG brand, a recognized leader in fastening solutions. These systems ensure secure installation, durability, and high performance, designed to meet the most demanding industry requirements.
In addition to the primary products listed below, do not hesitate to request any other fastening elements, as we possess a broader selection of fixing systems to meet your specific needs.

1.

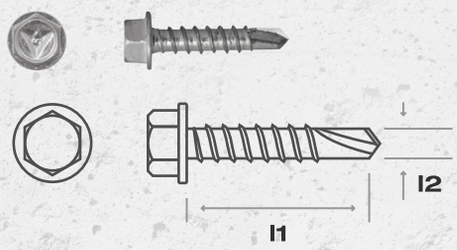

2.

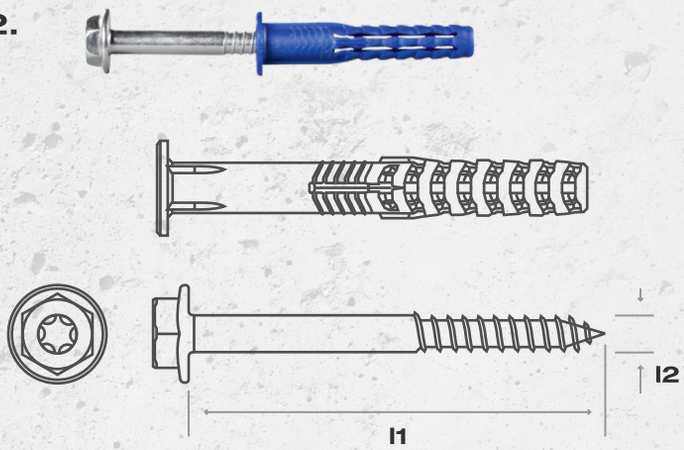

3.

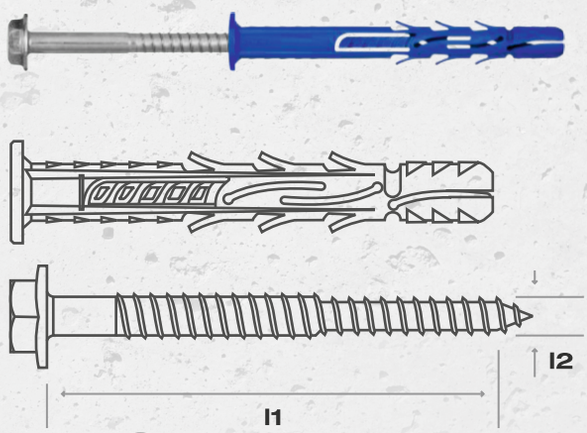

4.

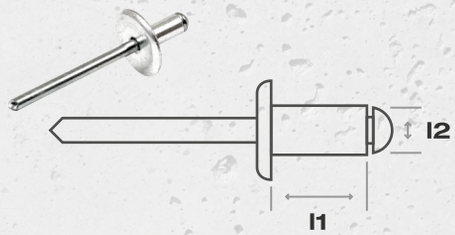

FASTENING ELEMENTS

item no.	item name	code	lenght 1	lenght 2 / height 2
1.	Self-drilling screw made of stainless steel with a hexagonal head (perforation up to 6 mm)	OCS-55025	25	5,5
2.	Premium plastic anchor (hexagonal head) M10x60	R-FFS-N-10K060	60	10
3.	Premium plastic anchor (carbon steel, hexagonal head) M10x80	R-FF1-N-10K080	80	10
4.	Popnit	-	16	4,9
5.	Mechanical anchor - R-XPT	Expansion anchor for static loads in non-cracked concrete (carbon steel) M10x80		
6.	Mechanical anchor - R-XPTIIIZP	Carbon steel expansion anchor with anti-corrosion ZP coating for non-cracked concrete M10x95		
7.	Chemical anchor - R-KEM II	Universal chemical anchor for installation in concrete and masonry – 300 ml Standard		



MINISTERUL DEZVOLTĂRII , LUCRĂRILOR PUBLICE ŞI ADMINISTRAŢIEI
CONSILIUL TEHNIC PERMANENT PENTRU CONSTRUCŢII

Tehnic în Construcții AR Agrement România

Agrement Tehnic
016-02/429-2025

PROCEDEU LRHus PENTRU FIXAREA PANOURILOR DECORATIVE ALE FAŢADELOR VENTILATE PE STRUCTURĂ DIN PROFILE DE ALUMINIU
PROCÉDURE LRHus POUR LA FIXATION DE PANNEAUX DÉCORATIFS DE FAÇADES VENTILÉES SUR STRUCTURE DE PROFILÉS EN ALUMINIUM
LRHus PROCEDURE FOR FIXING DECORATIVE PANELS OF VENTILATED FACADES ON ALUMINUM PROFILES STRUCTURE
LRHus VERFAHREN ZUR BEFESTIGUNG VON DEKORATIVEN PLATTEN VON HINTERLÜFTETEN FASSADEN AUF ALUMINIUMPROFILSTRUKTUREN
Cod produs: 9

PRODUCĂTOR: ***S.C. LRH UNIQUE SUPPLIES S.R.L.***
Strada Alba Iulia, nr. 53A, Curtici, jud. Arad, România
Tel: +40 744 475 195; Fax: -

TITULAR AGREMENT TEHNIC: S.C. LRH UNIQUE SUPPLIES S.R.L.
Strada Alba Iulia, nr. 53A, Curtici, jud. Arad, România
Tel: +40 744 475 195; Fax: -

ELABORATOR AGREMENT TEHNIC: *ICECON S.A. - Bucureşti*
Institutul de Cercetări pentru Echipamente şi Tehnologii în Construcţii
Şos. Pantelimon 266, sector 2, Cod Poştal 021652
Tel: +40 021.202.55.00; Fax: +40 021.255.14.20

Grupa specializată nr. 2
Elemente de închidere, compartimentare, pereţi nestructurali, tâmplărie şi vitraje

Prezentul agrement tehnic este valabil până la data de 26.11.2028 numai însoţit de AVIZUL TEHNIC al Consiliului Tehnic Permanent pentru Construcţii şi nu ţine loc de certificat de calitate

ICECON S.A. DEPARTAMENTUL AGREMENTE TEHNICE

MINISTERUL DEZVOLTĂRI
CONSILIUL TEHNIC

În baza procesului-verb
nr. **268301** al Comisiei tehnice de s
construcţii:

CONSILIUL TEHNIC

agrementul tehnic nr. **016-02/429-2**
ECHIPAMENTE ŞI TEHNOLOGII ÎN CC
fixarea panourilor decorative ale f
produs/e de **S.C. LRH Unique Suppl**
Prezentul **AVIZ TEHNI**
poate prelungi în situaţia în care t
obiectului agrementului tehnic, pot
tehnic.
Agrementul tehnic est
titular, producător şi distribuitorii d

PREŞEDINTE AL CON

CONSTRUCŢII
SECRETAR DE STAT
KÖVÉR ORSOLYA-MÁRIA

ISO 9001 ISO 9001 ISO 9001 ISO 9001

MC Management Certification

MAN

LRH U

Cu sediul în: **Str. Alba Iu**
Şi cu următoarele sedii op

SISTEM

Conform cerinţelor standar
Pentru următoarele domen
Comerţ cu
Comerţ cu ri
construcţie şi echipa
şi furniturilor
Comerţ cu ridica

Certificat seria: C-MC Nr:
Data emiterii: 24.03.2026

Valabil până la următoarea viză anuală din data de: 23.03.2027

EFQM Member

ORGANISMUL DE CERTIFICARE MANAGEMENT CERTIFICATION www.mcert.ro

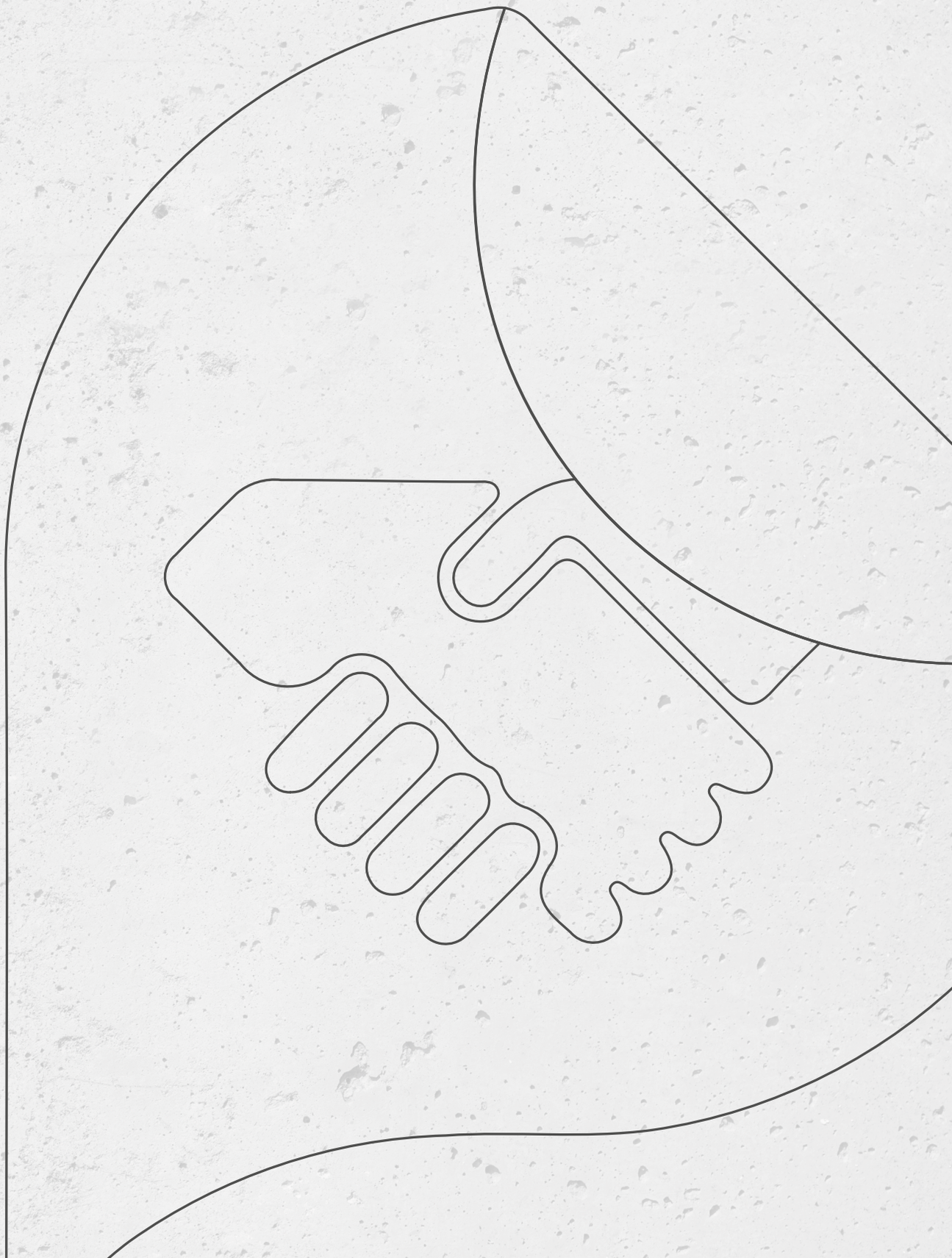



THANK YOU

LRH

0741 841 894
0742 076 683
office@lrhus.ro
www.lrhus.ro

53A Alba Iulia street, Curtici, Arad county

6th Unirii street, Arad, Arad county